ST50-6 ST70-6 ST110-6 ST125-6 Electric Schematic Diagram

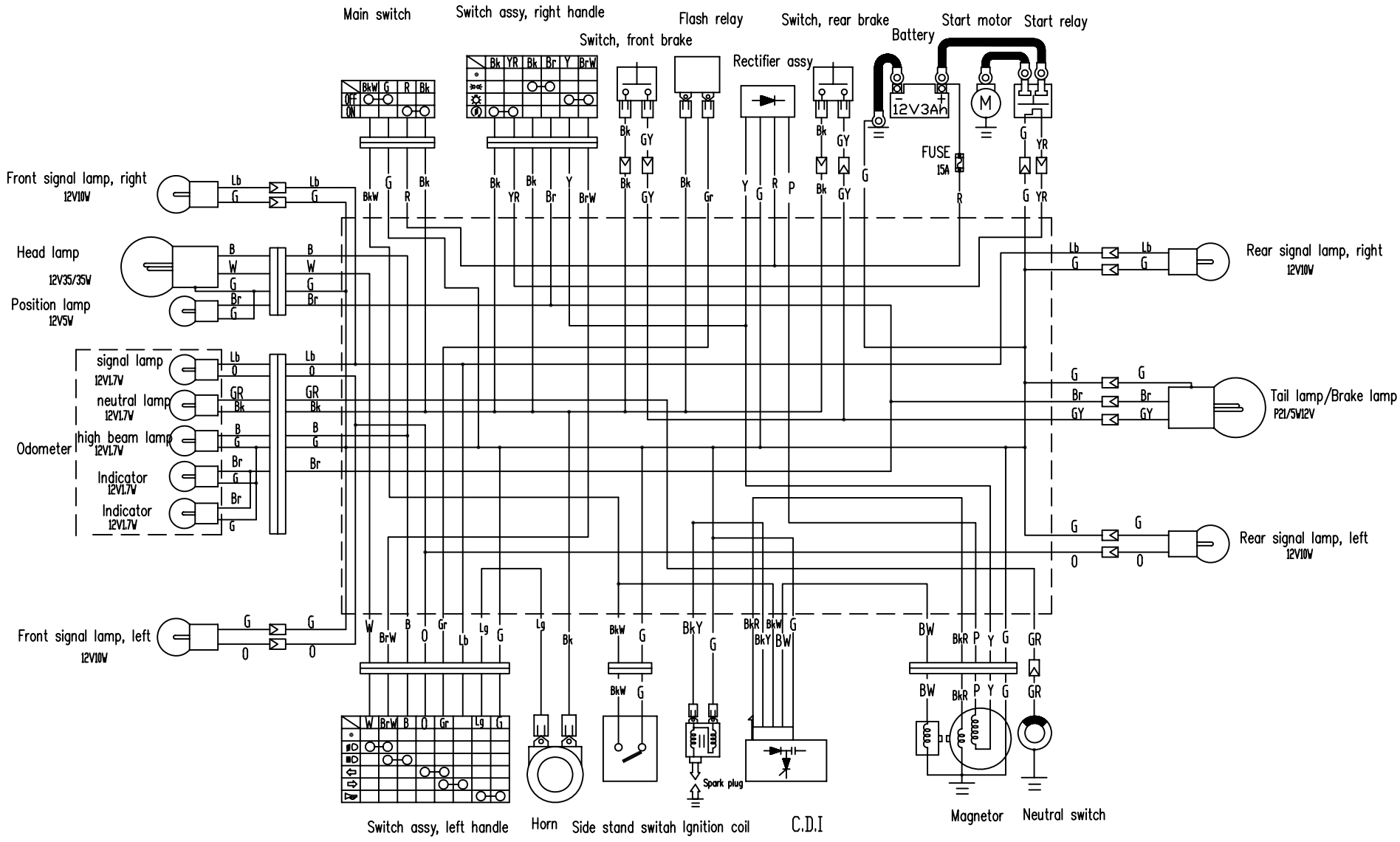

Switch, horn

	E	H□
○		
	○	○
Color	G	Lg

Switch, signal lamp

	L	WR	R
	○	○	
○			
		○	○
Color	O	Gr	Lu

Switch, high/low beam

	HL	Hi	Lo
	○		○
	○	○	
Color	BrW	B	W

Start switch

	ST	BAT
○		
	○	○
Color	YR	Bk

B	Blue	Y	Yellow	Lb	Light blue
O	Orange	Bk	Black	Gr	Grey
P	Pink	Br	Brown	Pu	Purple
R	Red	G	Green		
W	White	Lg	Light green		